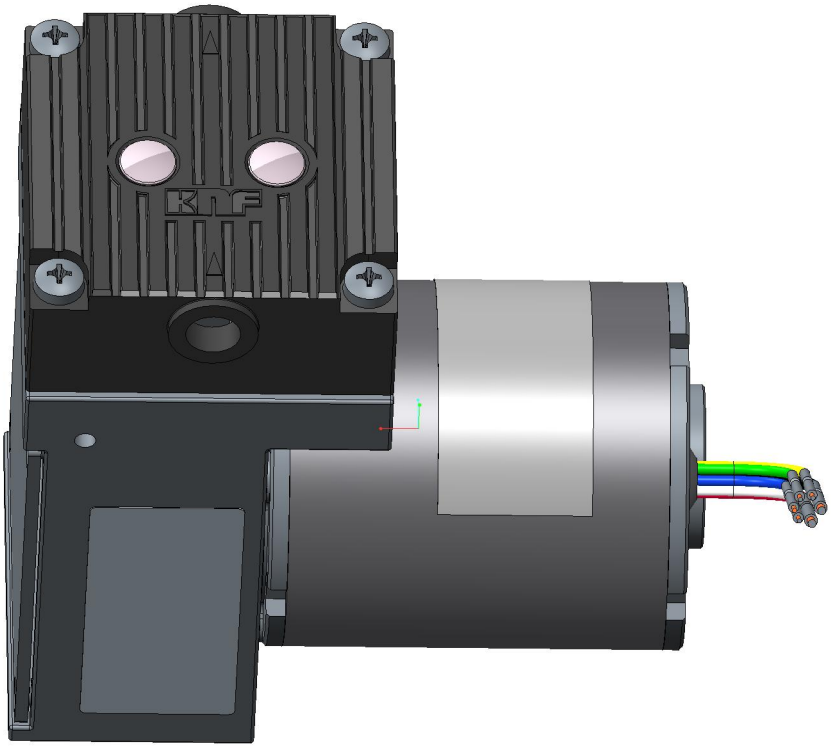
KNF