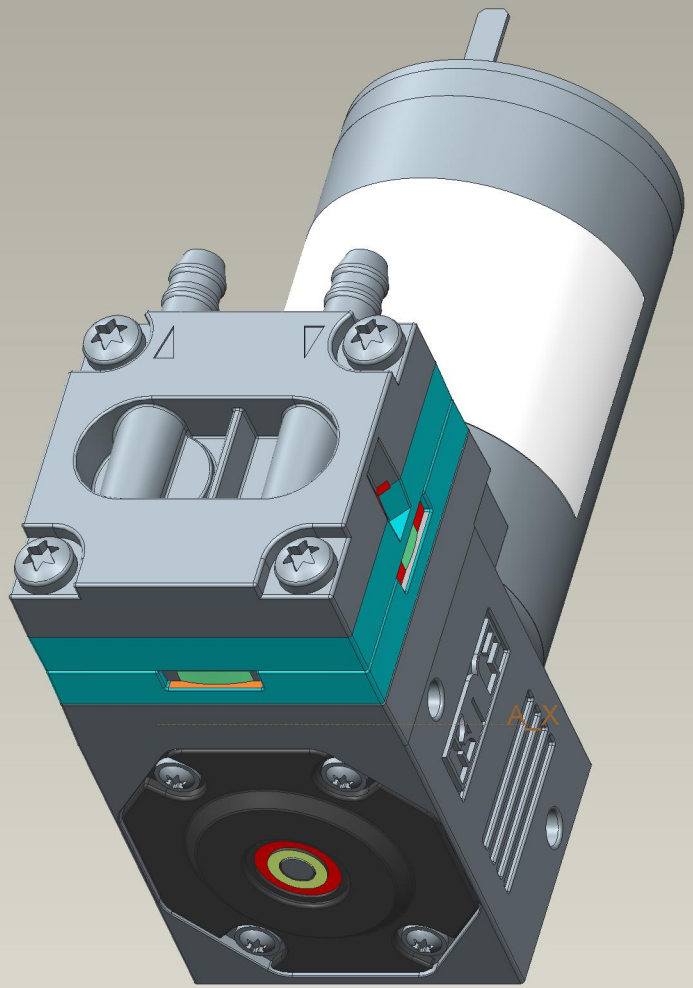
A_X