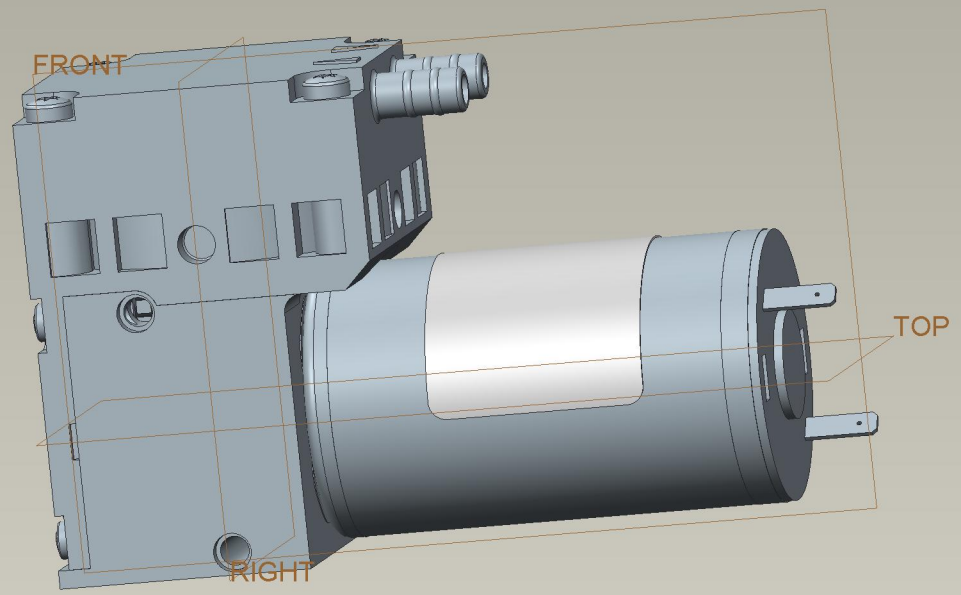
FRONT
TOP
RIGHT