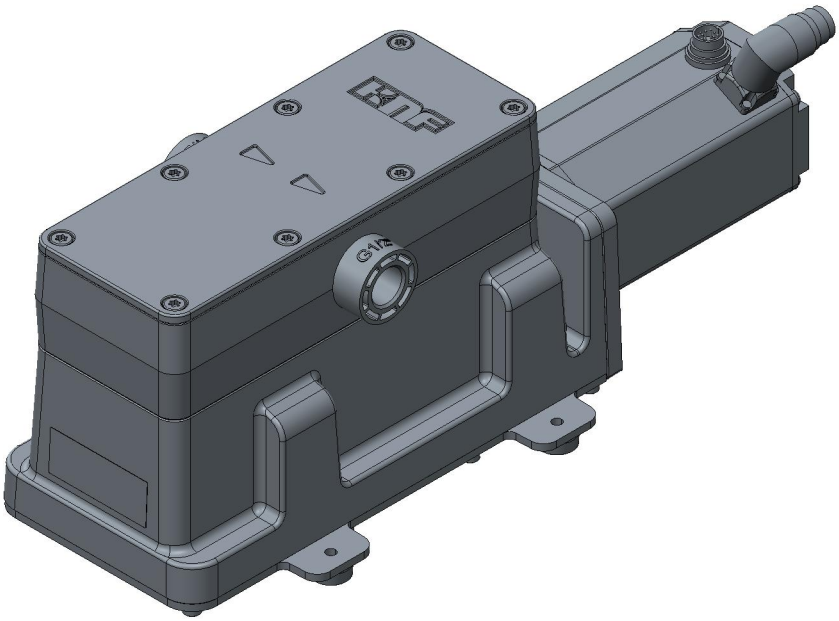
G1/2