N 630.3 SERIES
PROCESS VACUUM PUMPS AND COMPRESSORS

N 630.3 SP.9 E

ADVANTAGES

- High chemical resistance
- Durable even with difficult operating conditions
- High level of gas tightness
- Ambient temperatures of up to 60 °C possible with water cooling
- The pump can start against the entire pressure and vacuum range
- Quiet operation with minimal vibration
- .12 version with additional safety diaphragm for preventing gas from escaping through cracks in the working diaphragm

POSSIBLE AREAS OF USE

- Environmental monitoring
- Process industry
- Chemical industry
- Gas recovery
- Cryostat

Please visit our website
www.knf.com
to get more information

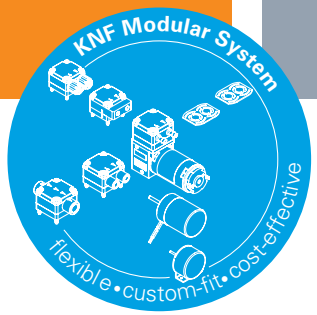

PERFORMANCE DATA				
Series model	**N 630.3 - 50 | 60 Hz Version**			
Material design	**ST.9 E / ST.13 E**	**ST.12 E**	**SP.9 E / SP.13 E**	**SP.12 E**
Pump head	Stainless steel			
Diaphragm	PTFE-coated		EPDM	
Valves	Stainless steel			
Flow rate at atm. pressure (l/min)[2]	30.0 | 35.0			
Ultimate vacuum (mbar abs.)	25			
Max. operating pressure (bar rel./psig)[1]	0.5/7.3			
Permissible ambient temperature (°C)	+5 ... +60 (+40 without water cooling)			
Permissible media temperature (°C)	+5 ... +60 (+40 without water cooling)			
Level of gas tightness (mbar x l/s) .9/.13/.12	6×10^{-3} / 5×10^{-5} / 5×10^{-5}			
Weight (kg/lbs)	45.0/99.2	47.0/103.6	45.0/99.2	47.0/103.6
ELECTRICAL DATA				
Voltage (V)	230/400	200/346	220/380	277/480
Motor	Three-phase motor			
Protection class motor	IP 55			
Protection class pump	IP 20			
Frequency (Hz)	50	50/60	60	60
Power P_1 (W)*	340	350	360	350
I_N (A), 50 Hz	3.3/1.9	3.3/1.9	-	-
I_N (A), 60 Hz	-		2.8/1.6	2.2/1.25

[1] bar relative to 1000 hPa; [2] Liter in the standard state (based on ISO 8788 and ISO 21360-1/2) (1000 hPa, 20°C); *Power rating refers to the pump. For external drive component sizing, use the motor nameplate data.

N 630.3 ST.9 E | ST.13 E

PERFORMANCE DATA

Series model	Flow rate at atm. pressure (l/min)[2]	Max. operating pressure (bar rel./psig)[1]	Ultimate vacuum (mbar abs.)
N 630.3 ST.9 E- 50 Hz	30.0	0.5/7.3	25
N 630.3 ST.13 E- 50 Hz	30.0	0.5/7.3	25
N 630.3 ST.9 E- 60 Hz	35.0	0.5/7.3	25
N 630.3 ST.13 E- 60 Hz	35.0	0.5/7.3	25

[1] bar relative to 1000 hPa; [2] Liter in the standard state (based on ISO 8788 and ISO 21360-1/2) (1000 hPa, 20°C)

N 630.3 ST.9 E | ST.13 E

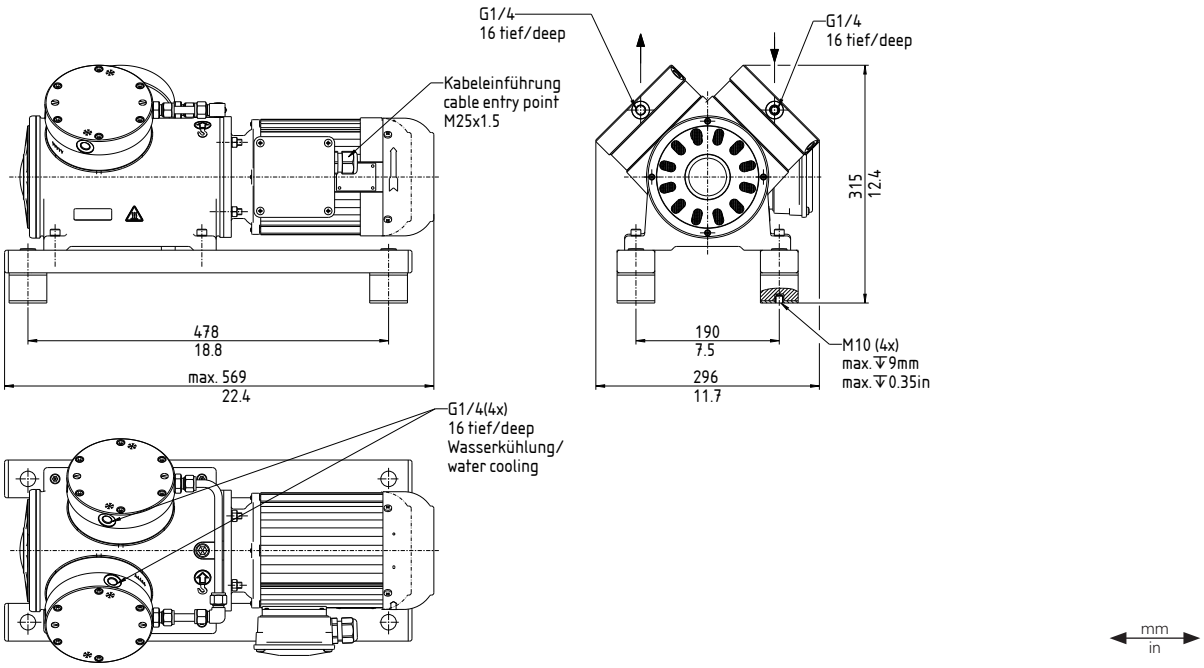

N 630.3 ST.9 E | ST.13 E

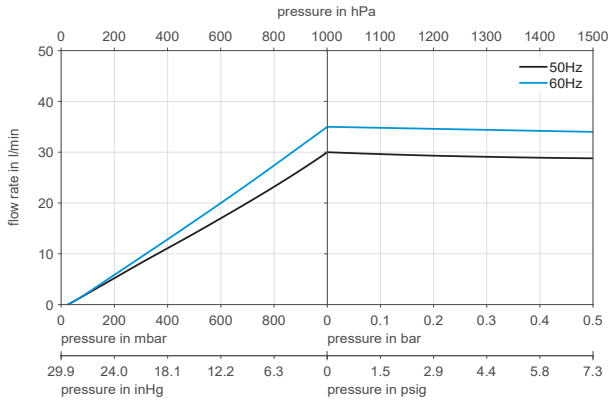

N 630.3 ST.9 E | ST.13 E
PUMP DOWN TIME FOR 20 LITER VESSEL

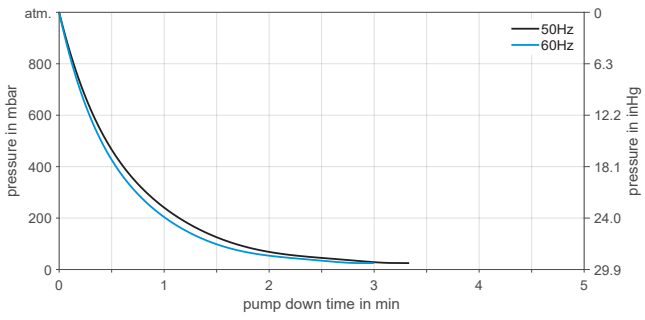

N 630.3 ST.9 E | ST.13 E
SUCTION PUMPING SPEED

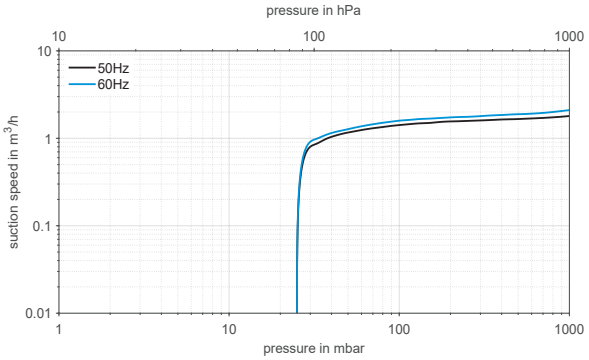

N 630.3 SP.9 E | SP.13 E

PERFORMANCE DATA

Series model	Flow rate at atm. pressure (l/min)[2]	Max. operating pressure (bar rel./psig)[1]	Ultimate vacuum (mbar abs.)
N 630.3 SP.9 E- 50 Hz	30.0	0.5/7.3	25
N 630.3 SP.13 E- 50 Hz	30.0	0.5/7.3	25
N 630.3 SP.9 E- 60 Hz	35.0	0.5/7.3	25
N 630.3 SP.13 E- 60 Hz	35.0	0.5/7.3	25

[1] bar relative to 1000 hPa; [2] Liter in the standard state (based on ISO 8788 and ISO 21360-1/2) (1000 hPa, 20°C)

N 630.3 SP.9 E | SP.13 E

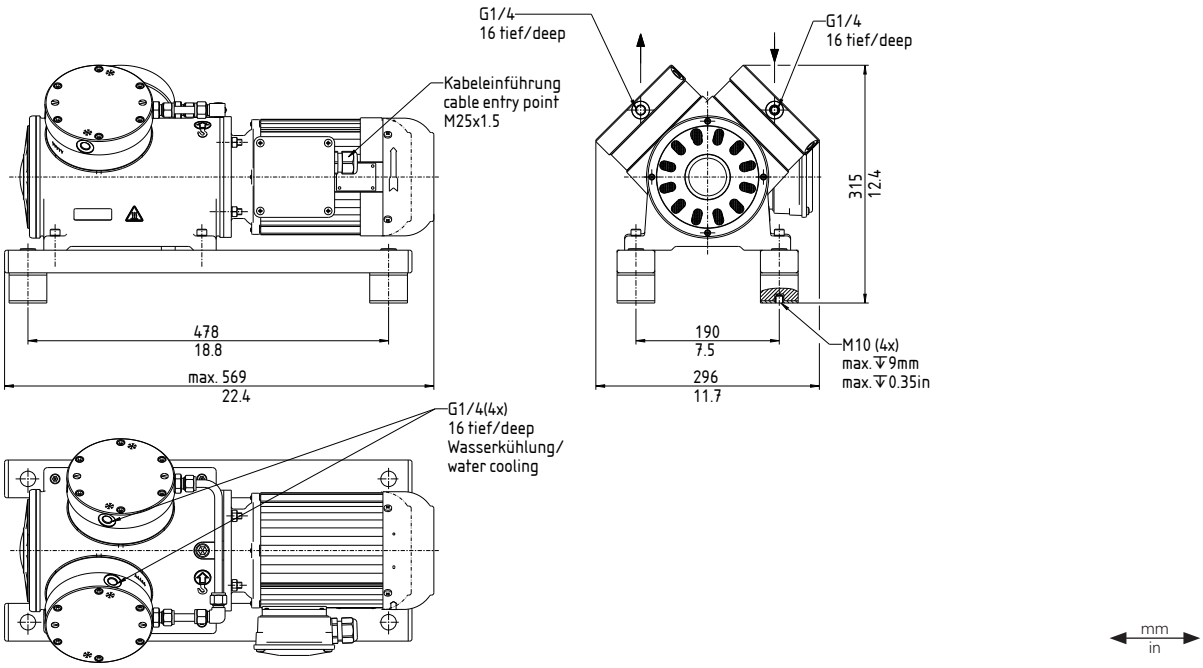

N 630.3 SP.9 E | SP.13 E

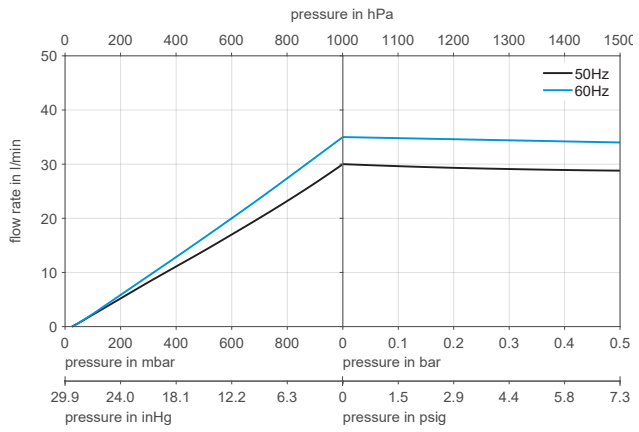

N 630.3 SP.9 E | SP.13 E
PUMP DOWN TIME FOR 20 LITER VESSEL

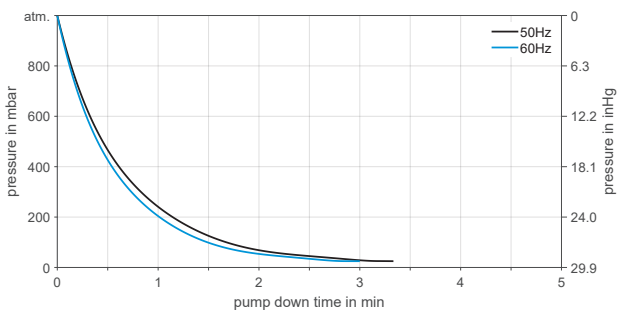

N 630.3 SP.9 E | SP.13 E
SUCTION PUMPING SPEED

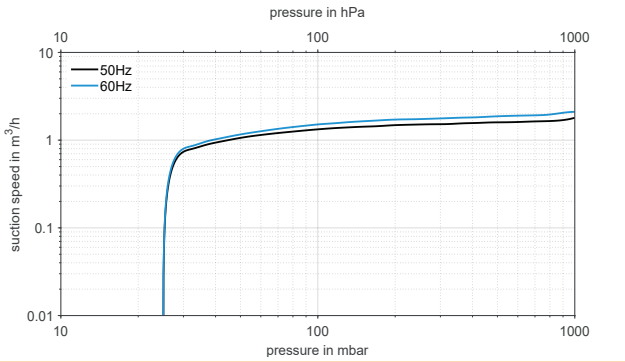

N 630.3 ST.12 E

PERFORMANCE DATA

Series model	Flow rate at atm. pressure (l/min)[2]	Max. operating pressure (bar rel./psig)[1]	Ultimate vacuum (mbar abs.)
N 630.3 ST.12 E- 50 Hz	30.0	0.5/7.3	25
N 630.3 ST.12 E- 60 Hz	35.0	0.5/7.3	25

[1] bar relative to 1000 hPa; [2] Liter in the standard state (based on ISO 8788 and ISO 21360-1/2) (1000 hPa, 20°C)

N 630.3 ST.12 E

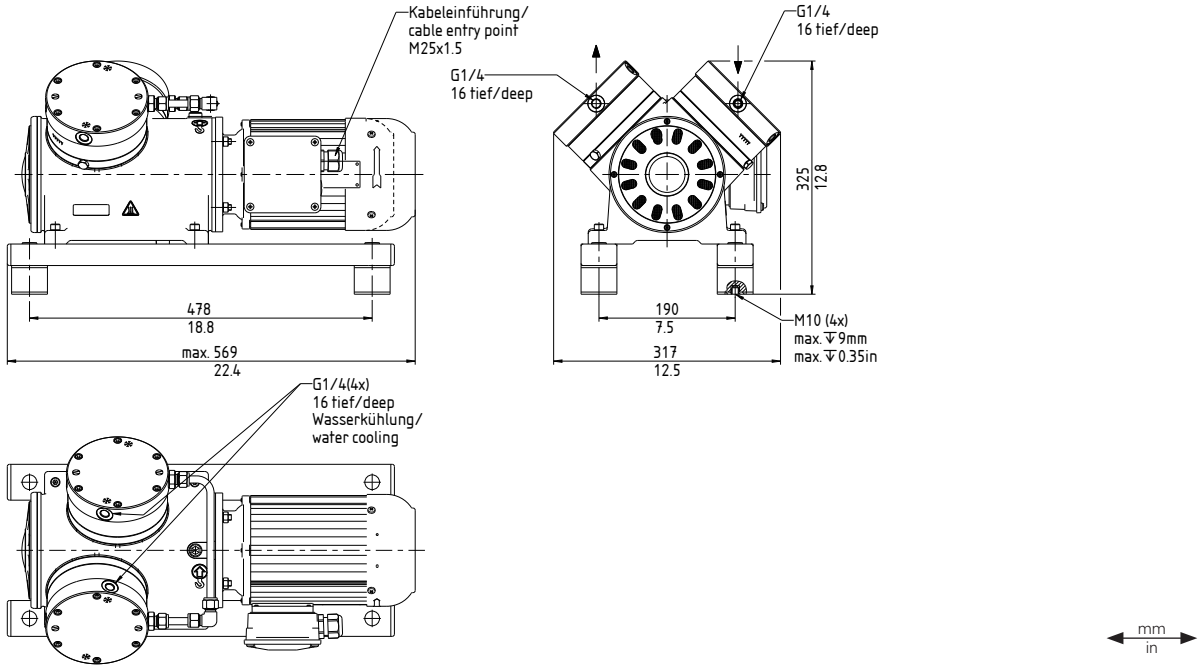

N 630.3 ST.12 E

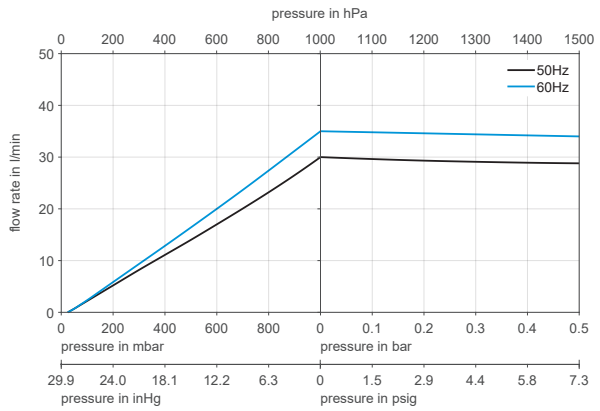

N 630.3 ST.12 E | PUMP DOWN TIME FOR 20 LITER VESSEL

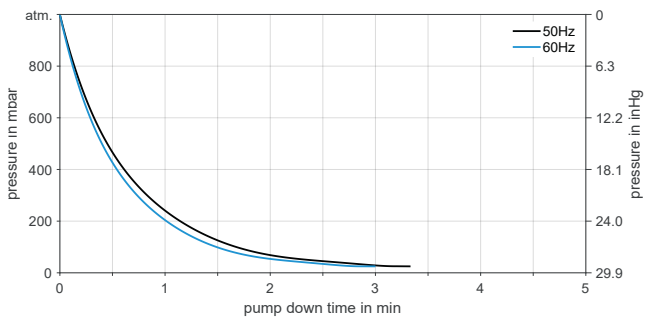

N 630.3 ST.12 E | SUCTION PUMPING SPEED

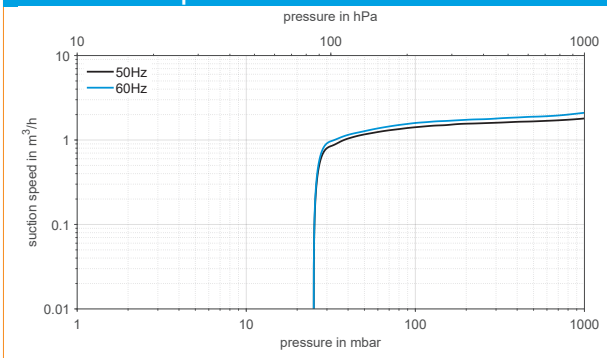

N 630.3 SP.12 E

PERFORMANCE DATA

Series model	Flow rate at atm. pressure (l/min)[2]	Max. operating pressure (bar rel./psig)[1]	Ultimate vacuum (mbar abs.)
N 630.3 SP.12 E- 50 Hz	30.0	0.5/7.3	25
N 630.3 SP.12 E- 60 Hz	35.0	0.5/7.3	25

[1] bar relative to 1000 hPa; [2] Liter in the standard state (based on ISO 8788 and ISO 21360-1/2) (1000 hPa, 20°C)

N 630.3 SP.12 E

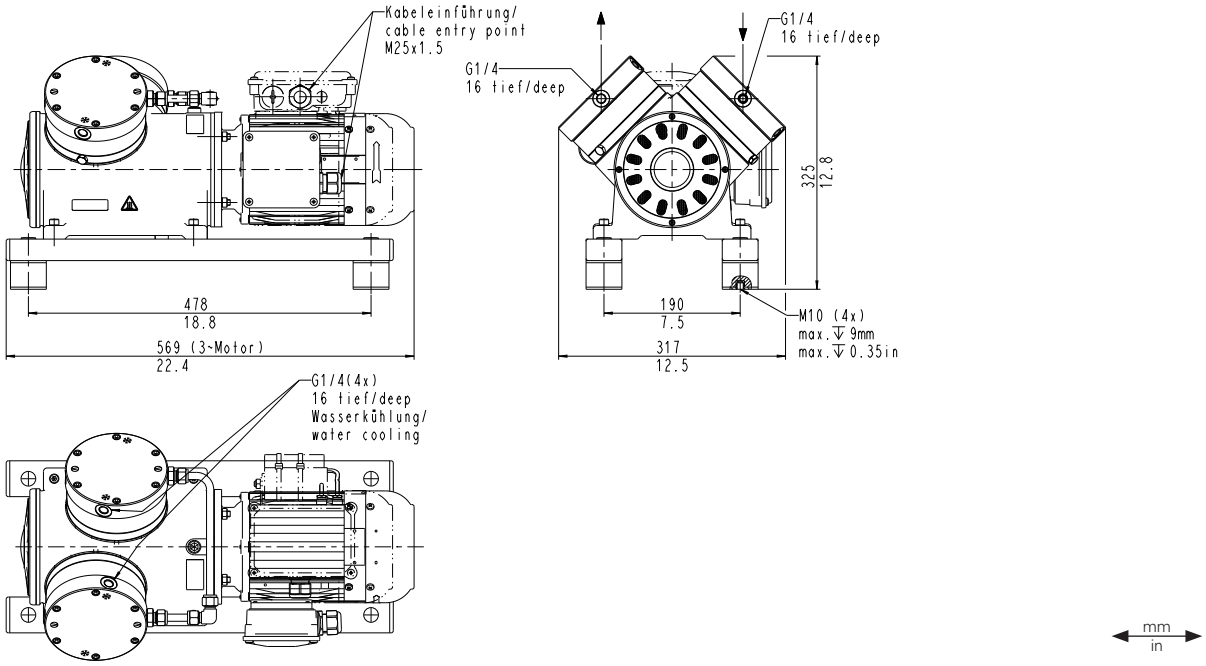

N 630.3 SP.12 E

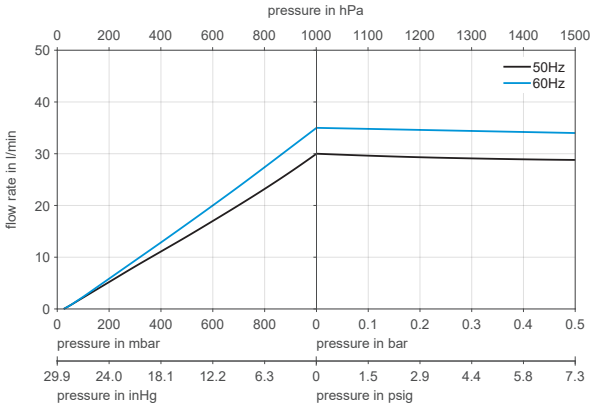

N 630.3 SP.12 E | PUMP DOWN TIME FOR 20 LITER VESSEL

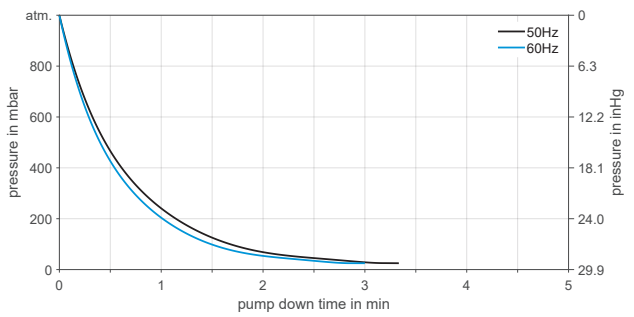

N 630.3 SP.12 E | SUCTION PUMPING SPEED

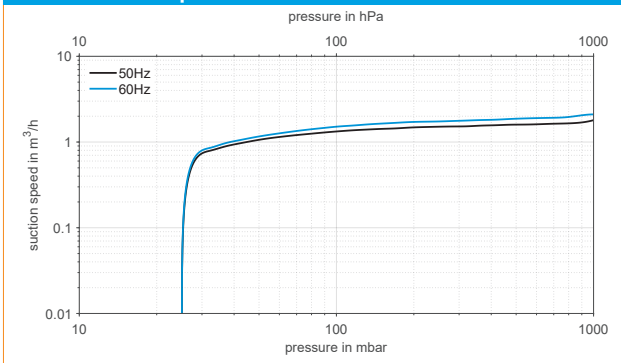

OPTIONS

Description	Illustration	Details
Mechanical adjustment of pumping capacity		The pumping capacity can be adjusted at the factory to accommodate inlet pressure and for accurate alignment with the customer's system.
Versions for special gases		Adjustment of the pump head for use with highly corrosive gases. Options include Hastelloy pump head components or coating.
Cleaned contact material parts	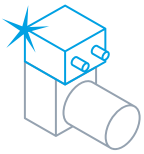	For the use of the pump with gases with high oxygen concentrations the parts that come into contact with the medium can be cleaned using a certified process.
Special coating	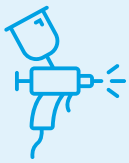	Special coatings for high corrosion protection (C4) for use in industrial areas and coastal areas with moderate salinity, such as maritime applications.
Certified head components		The components that come into contact with the medium are available with material certificates.
Special motors		Motors with special approval for maritime applications and motors with higher IP classification and insulation for tropical conditions are available on request.

ACCESSORIES

Description	Illustration	Part No.
Connection water cooling device N 630.3 S_.9 E | S_.13 E		310443
Connection water cooling device N 630.3 S_.12 E		310444
Inlet filter		316661
Transport eyebolt		311535
Wrench for retainer plate		321664
Retainer plate screw N 630.3 S_.9 E | S_.13 E		314279
Retainer plate screw N 630.3 S_.12 E		314280
Corrugated hose for pneumatic connection; length 400 mm		333227
Corrugated hose, certified for pneumatic connection; length 400 mm		333228

SPARE PARTS

Description	Illustration	Part No.	Details
Spare parts kit N 630.3 ST.9 E		321882	Spare parts kit consists of: 2x diaphragm, 4x reed valve, 4x valve stopper, 2x PTFE washer, 8x O-rings, 4x screws. This set is required to maintain the pump.
Spare parts kit N 630.3 ST.13 E		321883	Spare parts kit consists of: 2x diaphragm, 4x reed valve, 4x valve stopper, 2x PTFE washer, 12x O-rings, 4x screws. This set is required to maintain the pump.
Spare parts kit N 630.3 SP.12 E		321881	Spare parts kit consists of: 4x diaphragm, 4x reed valve, 4x valve stopper, 16x O-rings, 4x screws. This set is required to maintain the pump.
Spare parts kit N 630.3 SP.9 E		321879	Spare parts kit consists of: 2x diaphragm, 4x reed valve, 4x valve stopper, 8x O-rings, 4x screws. This set is required to maintain the pump.
Spare parts kit N 630.3 SP.13 E		321880	Spare parts kit consists of: 2x diaphragm, 4x reed valve, 4x valve stopper, 12x O-rings, 4x screws. This set is required to maintain the pump.
Spare parts kit N 630.3 ST.12 E	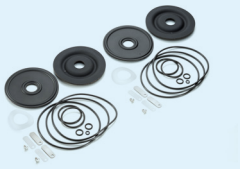	325527	Spare parts kit consists of: 4x diaphragm, 4x reed valve, 4x valve stopper, 2x PTFE washer, 16x O-rings, 4x screws. This set is required to maintain the pump.

The performance values for the series models shown on this data sheet were determined under test conditions.
The actual performance values may differ and depend in particular on the usage conditions and therefore on the specific application, on the parameters of the components involved in the user's system and on any technical modifications carried out which deviate from the standard configuration or the as delivered condition.

If individual designs have been created for specific customers on the basis of series models, other technical performance data may apply.
Before operation begins, the relevant operating instructions and/or assembly or installation instructions should be read and the safety information contained in these instructions should be noted.
KNF reserves the right to make changes to the product and the associated documentation without prior notice to the customer.

www.knf.com

KNF reserves the right to make technical changes without notice. KNF 10/2026. www.knf.com