N 920 SERIES
VACUUM PUMPS

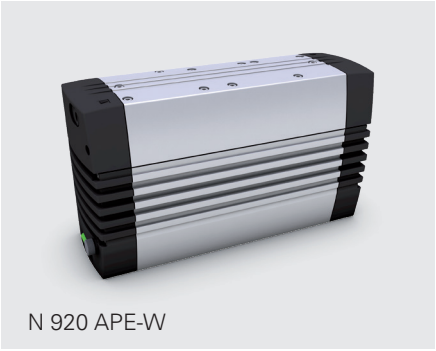

N 920 APE-W



N 920 APDC-B

ADVANTAGES

- Multi-voltage power supply input
- High-speed evacuation of the measurement chamber thanks to exceptional suction speed
- Stable vacuum in the transfer area to the turbomolecular pump

POSSIBLE AREAS OF USE

- Can be used as roughing pump for turbomolecular pumps – i.a. for surface finishing
- Instrumental analysis – especially in the field of spectroscopy
- Used in helium leak detectors

Please visit our website
www.knf.com
to get more information

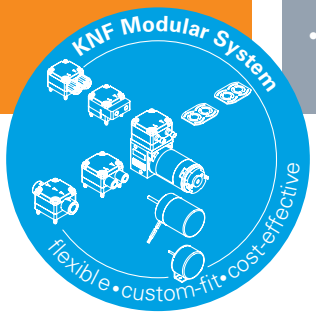

PERFORMANCE DATA		
Series model	**N 920**	
Material design	**APE-W**	**APDC-B**
Pump head	Aluminum	
Diaphragm	EPDM	
Valve plate	EPDM	
Flow rate at atm. pressure (l/min)[1]	21.0	
Ultimate vacuum (mbar abs.)	< 1.5	
Max. operating pressure (bar rel./ psig)[2]	0.5/7.3	
Permissible ambient temperature (°C)	+10 ... +40	
Permissible media temperature (°C)	+5 ... +40	
Weight (kg/lbs)	10.0/22.0	8.5/18.7
ELECTRICAL DATA		
Voltage (V)	100–240	24
Motor	Brushless DC motor with AC power supply	Brushless DC motor
Protection class motor	IP 20	IP 00
Frequency (Hz)	50–60	-
Power P_1 (W)	120	100
I_{max} (A)	1.30	4.2 (starting current temporary 200 ms: 7 A)

[1] Liter in the standard state (based on ISO 8788 and ISO 21360-1/2) (1000 hPa, 20°C); [2] bar relative to 1000 hPa

N 920 APE-W

PERFORMANCE DATA

Series model	Flow rate at atm. pressure (l/min)[1]	Max. operating pressure (bar rel./psig)[2]	Ultimate vacuum (mbar abs.)
N 920 APE-W	21.0	0.5/7.3	< 1.5

[1] Liter in the standard state (based on ISO 8788 and ISO 21360-1/2) (1000 hPa, 20°C); [2] bar relative to 1000 hPa

N 920 APE-W

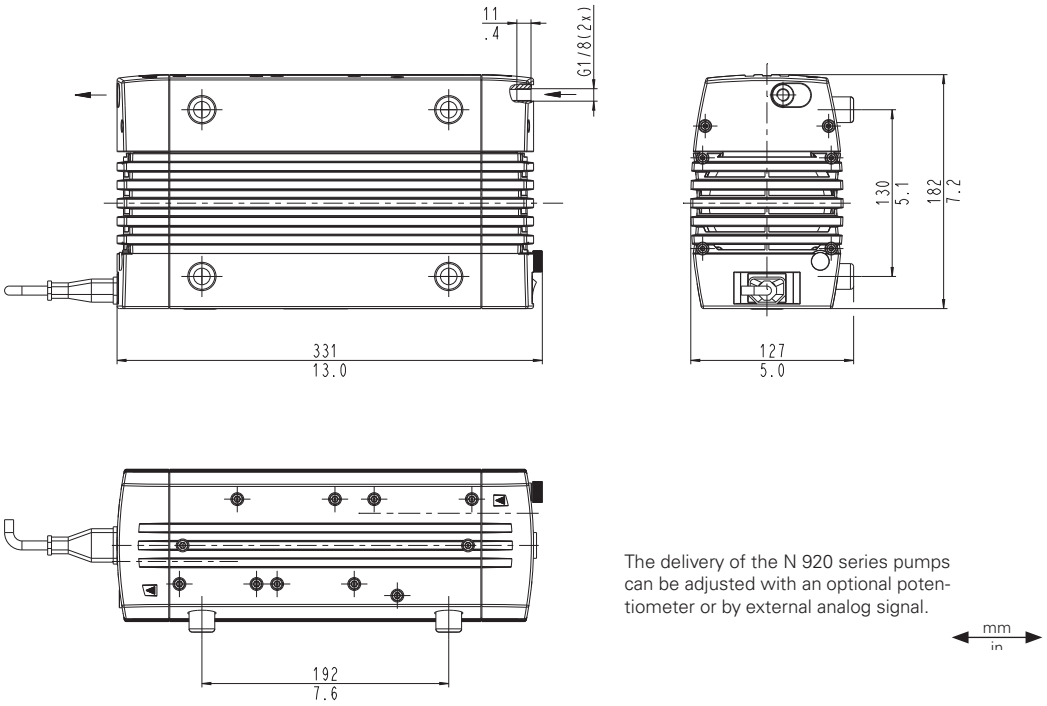

The delivery of the N 920 series pumps can be adjusted with an optional potentiometer or by external analog signal.

mm
in

N 920 APE-W

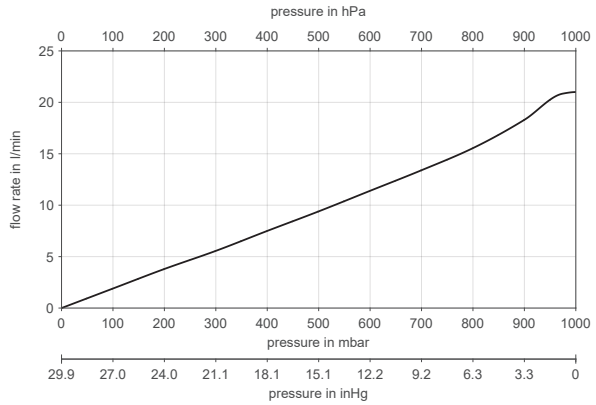

N 920 APE-W | PUMP DOWN TIME FOR 10 LITER VESSEL

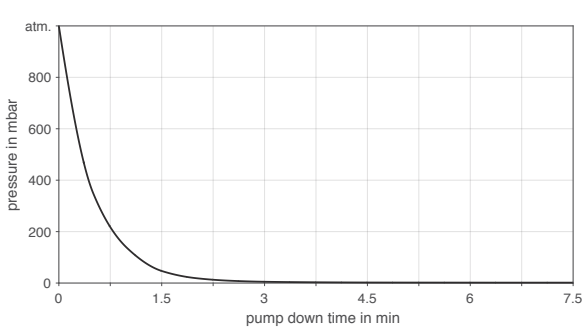

N 920 APE-W | SUCTION PUMPING SPEED

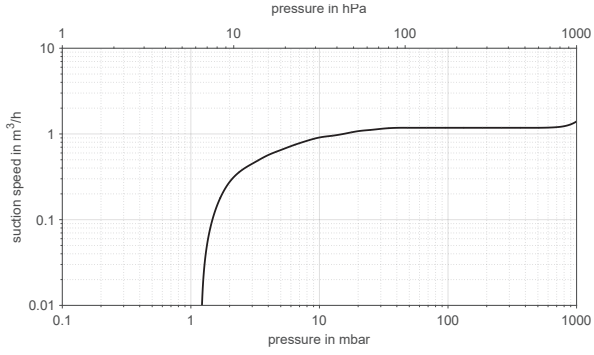

N 920 APDC-B

PERFORMANCE DATA

Series model	Flow rate at atm. pressure (l/min)[1]	Max. operating pressure (bar rel./psig)[2]	Ultimate vacuum (mbar abs.)
N 920 APDC-B	21.0	0.5/7.3	< 1.5

[1] Liter in the standard state (based on ISO 8788 and ISO 21360-1/2) (1000 hPa, 20°C); [2] bar relative to 1000 hPa

N 920 APDC-B

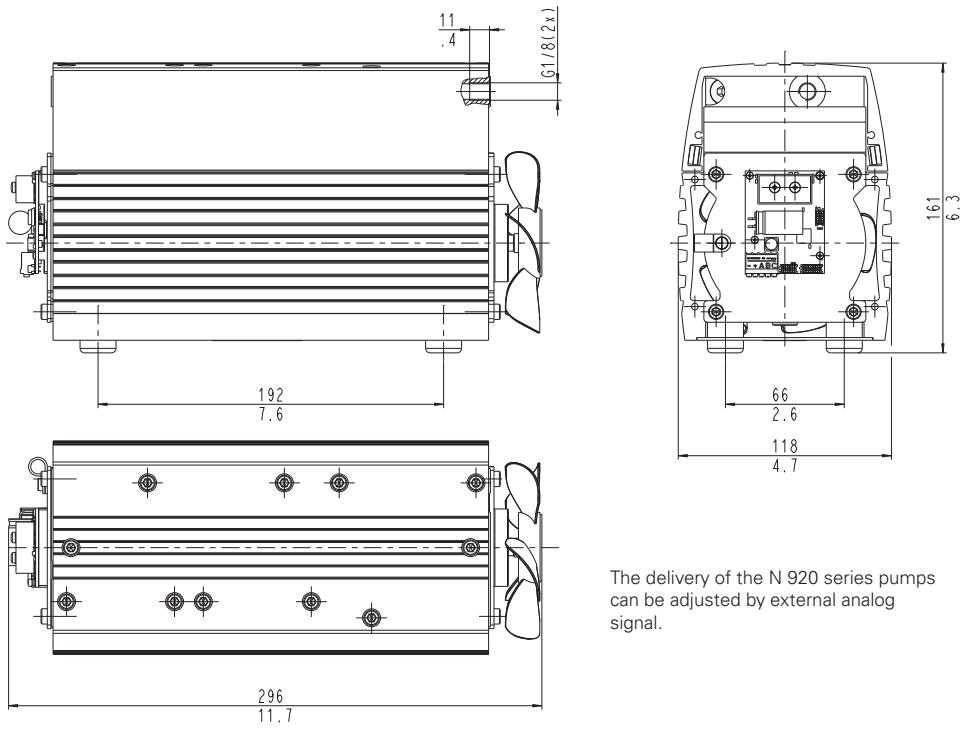

The delivery of the N 920 series pumps can be adjusted by external analog signal.

mm
in

N 920 APDC-B

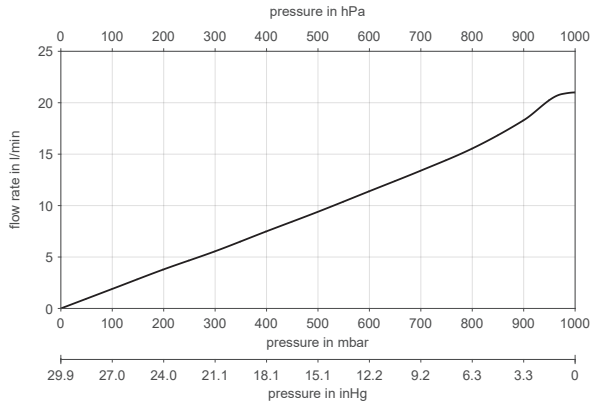

N 920 APDC-B | PUMP DOWN TIME FOR 10 LITER VESSEL

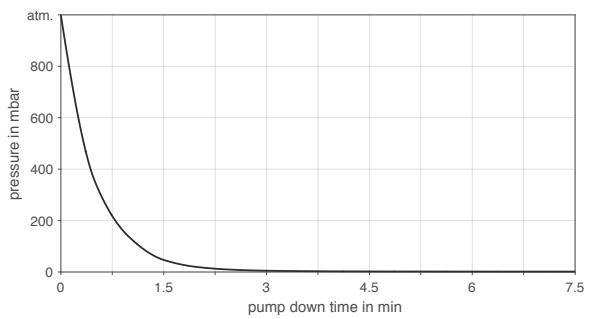

N 920 APDC-B | SUCTION PUMPING SPEED

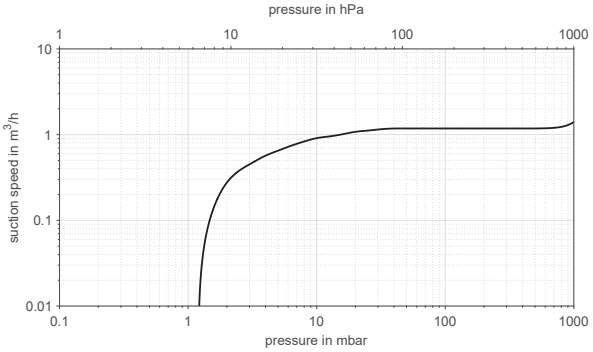

OPTIONS

Description	Illustration	Details
Gasbalast	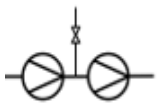	The use of gasbalast reduces the partial pressure of the condensable gases due to the additional gasvolume flow and remove condesate from the pump.

ACCESSORIES

Description	Illustration	Part No.	Details
Silencer/Inlet filter		007006	G 1/8
Small flange, stainless steel		046625	KF 16
Hose connector		029113	G 1/8, for tube ID 9
Sealing for hose connector		026906	

SPARE PARTS

Description	Illustration	Part No.	Details
Spare parts kit		057456	Spare parts kit consists of: 3x structured diaphragm, 6x valve plate, 8x sealing ring. This set is required to maintain the pump.
Stabilization diaphragm		056523	

The performance values for the series models shown on this data sheet were determined under test conditions. The actual performance values may differ and depend in particular on the usage conditions and therefore on the specific application, on the parameters of the components involved in the user's system and on any technical modifications carried out which deviate from the standard configuration or the as delivered condition.

If individual designs have been created for specific customers on the basis of series models, other technical performance data may apply. Before operation begins, the relevant operating instructions and/or assembly or installation instructions should be read and the safety information contained in these instructions should be noted. KNF reserves the right to make changes to the product and the associated documentation without prior notice to

www.knf.com

KNF reserves the right to make technical changes without notice. KNF 10/2026. www.knf.com