KNF 347383-347595 05/26

OEM

N816_DC-B-M

TRANSLATION OF ORIGINAL OPERATING AND INSTALLATION INSTRUCTION
ENGLISH

DIAPHRAGM PUMP

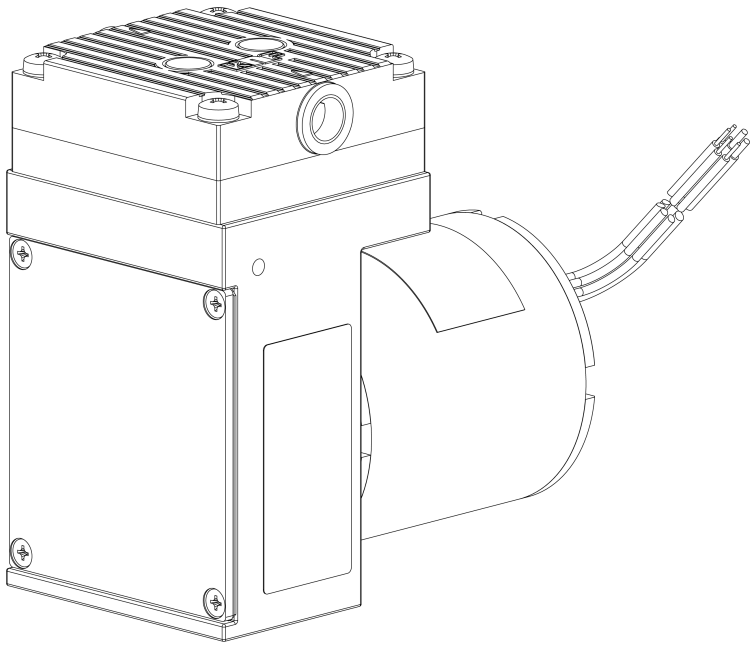

Notice!
Before operating the pump and accessories, read and observe the operating and installation instructions as well as the safety information!

Contents

1 About this document 3
1.1 Using the operating and installation instructions 3
1.2 Exclusion of liability 3
1.3 Symbols and markings 4
2 Safety 6
2.1 Personnel and target group 6
2.2 Responsibility of the operator 7
2.3 Working in a safety conscious manner 7
2.4 Operating conditions 8
2.5 Media 8
2.6 Use 9
2.7 Directives and standards 10
2.8 Customer service and repair 11
2.9 Disposal 12
3 Technical data 13
3.1 Technical data 13
4 Product description 16
5 Transport 18
6 Installation and connection 20
6.1 Installing the pump 20
6.2 Electrical connection 24
6.3 Pneumatic connection 28
7 Operation 30
7.1 General 30
7.2 Information on switching the pump on and off 33
7.3 Control functions DC-B-M 34
8 Servicing 36
8.1 Servicing schedule 37
8.2 Cleaning 38
8.3 Replacing diaphragm and valve plates/sealing rings 39
9 Spare parts and accessories 45
9.1 Spare parts 45
10 Troubleshooting 46
11 Returns 50
12 Appendix: China RoHS 51
12.1 KNF Statement on China RoHS.pdf 52

1 About this document

1.1 Using the operating and installation instructions

The operating and installation instructions are part of the pump.

→ In the event of uncertainties with regard to the content of the operating and installation instructions, please contact the manufacturer (contact data: see *www.knf.com*). Please have the type and serial number of the pump ready.

→ Read the operating and installation instructions before you commission the pump.

→ Give the operating and installation instructions only completely and unchanged to the next owner.

→ Keep the operating and installation instructions within reach at all times.

Project pumps

For customer-specific project pumps (pump models that begin with "PJ" or "PM"), there may be deviations from these operating and installation instructions.

→ For project pumps, also observe the agreed specifications.

Optional contents

Project-specific options may be included in the operating and assembly instructions. These are marked with "Optional". It is also possible that project-specific deviations are not included in the operating and assembly instructions.

1.2 Exclusion of liability

The manufacturer accepts no liability for damages and failures

→ from ignoring the operating and installation instructions.

→ due to changes or modifications to the device or improper handling.

→ due to the use of impermissible spare parts or accessory parts.

1.3 Symbols and markings

Warning notice

WARNING

A notice that warns you of danger is located here.

Possible consequences of a failure to observe the warning notice are specified here. The signal word, e.g., Warning, indicates the danger level.

→ Measures for avoiding the danger and its consequences are specified here.

Danger levels

Signal word	Meaning	Consequences if not observed
DANGER	warns of immediate danger	Death or serious injury or serious damage will result.
WARNING	warns of possible danger	Death, serious injury or serious damage is possible.
CAUTION	warns of a possibly dangerous situation	Minor injury or damage is possible.
NOTICE	Warns of possible damage	Damage is possible.

Tab.1: Danger levels

Other notices and symbols

→ An activity to be carried out is specified here (a step).

1. The first step of an activity to be carried out is specified here.
   Other sequentially numbered steps follow.

i This symbol indicates important information.

Explanation of pictograms

Pictogram	Meaning
	General warning symbol
	Warning of hot surface
	Warning of electrical voltage
	Warning of poisonous substances
	Warning of hand injuries through crushing
	Observe the operating instructions
	General mandatory sign

Tab.2: Explanation of pictograms

2 Safety

Observe the warning information in the chapters *6 Installation and connection [} 20]* and *7 Operation [} 30]*.

2.1 Personnel and target group

Personnel

Ensure that only specialized personnel carry out work on the pumps. This applies, in particular, to mounting, connection and maintenance work.

Make sure that the personnel have read and understood the operating instructions, particularly the chapter on safety.

Target group

Target group	Definition
User personnel	Employee
Specialized personnel	Specialized personnel are personnel who - have relevant professional training in the field covered in the particular section of text; - have current knowledge of the field covered in the particular section of text. A distinction is made between the following specialized personnel: C2: Skilled worker C2-Me: Skilled worker - Mechanical fitter C2-Pi: Skilled worker - Pipeline fitter C2-EL: Skilled worker - Electrician

Tab.3: Target group

Who-does-what matrix

Lifecycle phase	User personnel	Specialized personnel
Transport		C2
Mounting		C2-Me
Connection		C2-Pi, C2-EL
Commissioning	X	C2
Operation	X	C2
Maintenance		C2-Me
Troubleshooting		C2C2-Pi, C2-EL
Disposal		C2

Tab.4: Who-does-what matrix

2.2 Responsibility of the operator

The pumps are produced in accordance with the generally recognized rules of engineering, as well as the occupational health, safety and accident prevention regulations. Nevertheless, dangers can arise during their use that lead to injuries to the user or third parties or to damage to the pump or other property.

Only use the pumps in perfect technical condition, for their intended use, safely and with an awareness of the dangers and in observation of the operating and installation instructions.

The components that are to be connected to the pumps must be designed according to the pneumatic data of the pumps.

When connecting the pumps to the electrical power supply, observe the corresponding safety rules.

Make sure that no hazardous situation, physical harm or impairment of the pump can occur.

Operating parameters

Only operate and install the pump under the operating parameters and operating conditions described in Chapters *2.4 Operating conditions [⇨ 8]* and *3 Technical data [⇨ 13]*.

2.3 Working in a safety conscious manner

Observe the regulations on accident prevention and safety during all work on the pumps and during operation.

Avoid contact with the pump heads and housing parts because the pump heats up during operation.

When working on the pump, make sure that the pump is disconnected from the power and free of voltage.

When connecting the pump to the power supply, observe the corresponding safety rules.

Ensure that no hazards arise from gas flowing when gas connections are open, from the effects of noise or from hot, corrosive, dangerous and environmentally hazardous gases.

Ensure that the pump installation is EMC compliant such that no hazardous situations can occur.

2.4 Operating conditions

Only use the pump in perfect technical condition, for its intended purpose, safely and with an awareness of the dangers and in observation of the operating instructions.

Only install and operate the pumps in accordance with the operating parameters and conditions described in Chapter *3 Technical data [} 13]*.

Only pumps that are fully assembled and in the condition as delivered may be operated.

Make sure that the installation location is dry and that the pump is protected from rain, splash water, gushing water, dripping water and other contamination.

Check the tightness of the connections between the pipes of the application and the pump (or the connection of the pump) at regular intervals. Leaky connections carry the risk of releasing dangerous gases and vapors from the pump system.

2.5 Media

Requirements of pumped media

Before transferring a medium, check whether the medium can be transferred without risk in the specific application.

Take note of any change in the state of matter (condensation, crystallization).

Before using a medium, check the compatibility of the media-contacting components (see *3 Technical data [} 13]*) with the medium.

Risk of dangerous gas mixtures during pump operation if diaphragm breaks: Depending on the medium being transferred, breakage of the diaphragm can result in a dangerous mixture if the medium mixes with the air in the compressor housing or the surroundings.

Only transfer gases that remain stable under the pressures and temperatures that arise in the pump.

Handling of hazardous media

Upon breakage of the diaphragm and/or leaks, the transferred medium mixes with the air in the surroundings and/or in the pump housing.

Make sure that a dangerous situation cannot arise as a result.

When pumping hazardous media, observe the safety regulations for the handling of said media.

Handling of combustible media

Note that the pump is not designed to be explosion-proof.

Make certain that the temperature of the medium is always sufficiently below the ignition temperature of the medium so as to prevent ignition or explosion. This also applies for abnormal operating situations.

Note that the temperature of the medium increases when the pump compresses the medium.

Therefore, make certain that the temperature of the medium also remains sufficiently below the ignition temperature of the medium even when it is compressed to the maximum permissible operating pressure of the pump. The maximum permissible operating pressure of the pump is stated in Chapter *3 Technical data [} 13]*.

Make certain that the permissible ambient temperature (see *3 Technical data [} 13]*) is not exceeded.

Where applicable, also take into account external energy sources (such as radiated heat sources) that could additionally heat the medium.

In case of doubt, contact KNF Customer Service.

2.6 Use

2.6.1 Proper use

The pumps are intended exclusively for transferring gases and vapors.

The pumps are intended exclusively for operation in indoor areas and in non-explosive atmospheres.

2.6.2 Foreseeable misuse

The pumps must not be operated in explosive atmospheres.

The pumps are not suitable for transferring the following:

- Dusts
- Liquids
- Aerosols
- Biological and microbiological substances
- Fuels
- Explosives and flammable materials
- Fibers
- Oxidizing agents
- Foodstuffs.

As standard, the pumps must not be used for simultaneous generation of a vacuum and positive pressure.

This function can be made possible on a project basis following consultation with KNF Customer Service.

Do not apply positive pressure to the inlet of the pump.

This function can be made possible on a project basis following consultation with KNF Customer Service.

2.7 Directives and standards

EU/EC Directives

Declaration of incorporation – for partly completed machinery

With respect to the Machinery Directive 2006/42/EC, the pumps are partly completed machinery and are, therefore, to be regarded as not ready for use. Partly completed machinery may not be commissioned until it has been determined that the machine into which the partly completed machinery is to be installed complies with the provisions of the Machinery Di-

rective 2006/42/EC. The following fundamental requirements of Annex I of Directive 2006/42/EC (general principles) are applied and observed:

- General principles no. 1
- No. 1.1.2. / 1.1.3. / 1.3.1. / 1.3.3. / 1.3.4. / 1.4.1. / 1.5.8. / 1.5.9. / 1.7.4. / 1.7.4.1. / 1.7.4.3.

Standards

The following standards apply:

- EN 61000-6-2/3
- EN IEC 63000

The protective goals of the following directive(s) are achieved:

- Directive 2011/65/EU on the restriction of the use of certain hazardous substances in electrical and electronic equipment (Annex II changed by delegated Directive (EU) 2015/863 of the Commission)

China RoHS

Relevant information has been provided to comply with the regulations of SJ/T 11364-2024 ("Labeling to Control Pollution Caused by Electronic Information Products") and China's administrative methods for controlling pollution caused by electronic information products.

For detailed information, see chapter *12 Appendix: China RoHS [⟩ 51]*.

2.8 Customer service and repair

Customer service and repairs

The pump is maintenance-free. However, KNF recommends periodic inspection of the pump for obvious changes in noise or vibration.

Only have repairs to the pumps performed by qualified KNF personnel.

Housings with electrically live components may only be opened by specialist personnel.

Use only genuine spare parts from KNF when performing servicing work.

2.9 Disposal

Environmental protection

Store the pump and all accessories in accordance with the environmental provisions. Observe national and international regulations. This applies in particular to parts that are contaminated with toxic substances.

If you no longer need your packaging materials (e.g. for return shipment or other transport of the device), dispose of them in an environmentally friendly manner.

Old devices must not be disposed of with household waste. Proper disposal and recycling helps to protect natural resources and the environment. The end user is responsible for disposing of old devices according to national and international regulations. Alternatively, KNF products (old devices) may also be returned to KNF for a fee (see chapter *11 Returns [} 50]*).

3 Technical data

3.1 Technical data

Pump wetted materials

Assembly	Material KN	Material KT
Pump head	PPS	PPS
Diaphragm	EPDM	PTFE
Valves	EPDM	FFPM

Tab.5: Pump wetted materials

Pneumatic values

Parameter	Value KN	Value KT
Max. permissible operating pressure [bar rel.]*	0.5	0.5
Ultimate vacuum at rated speed [mbar abs.]	100	140
Flow rate at atm. pressure and rated speed [l/min]**	16	14
Flow rate at atm. pressure and 20% PWM signal [l/min]**	3.5	3.5

Tab.6: Pneumatic values (N816K_DC-B-M)
**bar rel. relative to 1000 hPa*
***Liters in the standard state (based on ISO 8778 and ISO 21360-1/2) (1000 hPa, 20°C)*

Pneumatic connections

Parameter	Value
Inlet	Thread size G1/8
Outlet	Thread size G1/8

Tab.7: Pneumatic connections

Electrical performance

Parameter	Value	
Voltage [V]*	24	
PWM signal [%]	20...100	
Max. rated current draw [A]:	N816KNDC-B	N816KTDC-B
- for $p > p_{atm.}$	1.3	1.1
- for $p < p_{atm.}$	1.1	1.0
Start-up current	The start-up current can be up to 50% higher than the max. rated current draw.	
Max. power consumption of the pump [W]:	N816KNDC-B	N816KTDC-B
- for $p > p_{atm.}$	31	26
- for $p < p_{atm.}$	24	24
Max. permissible supply voltage fluctuations	± 10%	
Motor protection class (DIN EN 60529 / IEC 60529)	IP30	
Overcurrent limit of motor electronics [A]	8	

Tab.8: Electrical performance
**Further voltage variants on request*

NOTICE

Maximum stall time of the rotor exceeded

If the maximum stall time of the rotor is exceeded in the event of a fault, the pump is switched off and must be reset manually:

→ Disconnect the pump from the electrical mains or PWM signal.

→ Before switching back on, eliminate the fault cause(s).

Weight

Pump type	Weight [kg]
N816K_DC-B-M	Approx. 1.05

Tab.9: Weight

Other parameters

Parameter	Value
Permissible ambient temperature [°C]	+ 5 to + 40
Permissible media temperature [°C]	+ 5 to + 40
Dimensions	See Fig. 3, Chapter *6.1 Installing the pump [⇨ 20]*
Highest permissible relative air humidity of the environment	80% for temperatures up to 31°C, decreasing linearly to 50% at 40°C.
Maximum installation altitude [m above sea level]	2000

Tab.10: Other parameters

4 Product description

Design

1 Pneumatic pump outlet
2 Pneumatic pump inlet
3 Motor

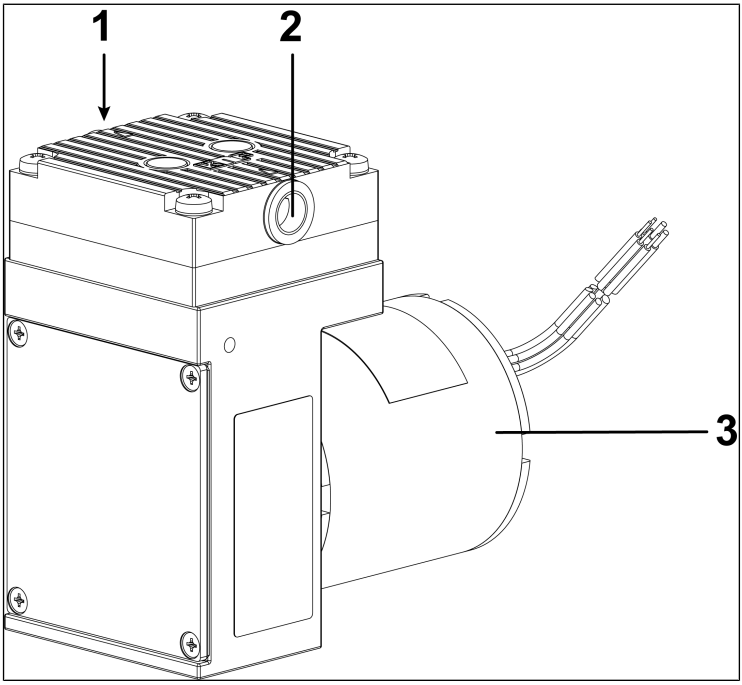

Fig.1: Design N816_DC-B-M

Function of a diaphragm pump

1 Outlet valve
2 Inlet valve
3 Transfer chamber
4 Diaphragm
5 Eccentric
6 Connecting rod

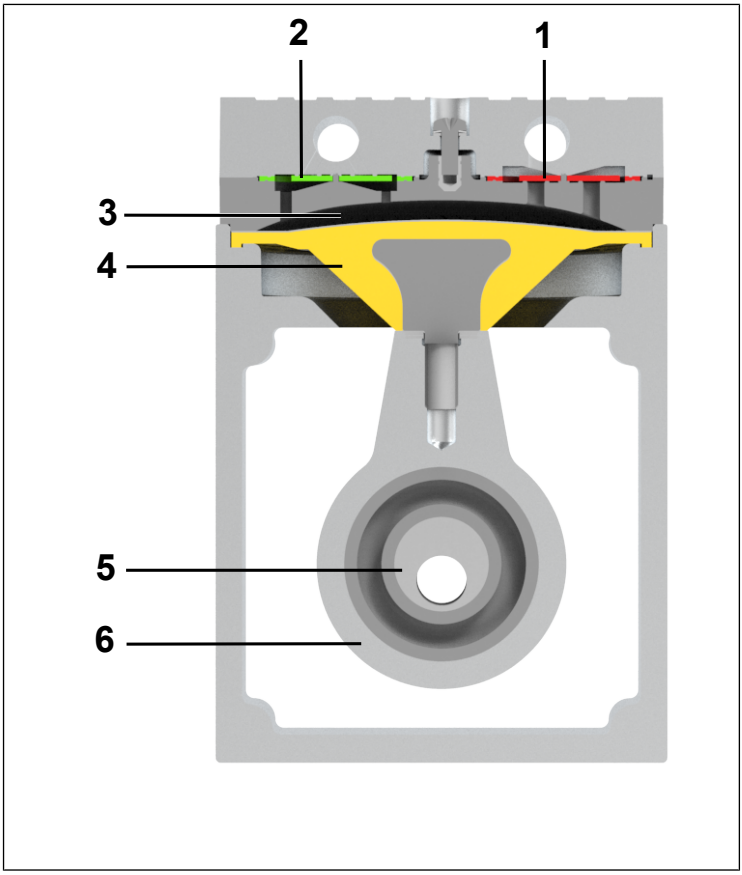

Fig.2: Function of a diaphragm pump

Diaphragm pumps transfer, compress (depending on the version) and evacuate gases and vapors.

The elastic diaphragm (4) is moved up and down by the eccentric (5) and the connecting rod (6). In the downwards stroke, it aspirates the gas to be transferred via the inlet valve (2). In the upwards stroke, the diaphragm presses the medium out of the pump head via the outlet valve (1). The transfer chamber (3) is separated from the pump drive by the diaphragm.

5 Transport

General

CAUTION

Personal injury and/or property damage due to incorrect or improper transport of the pump

In the event of incorrect or improper transport, the pump can fall down, be damaged or injure persons.

→ Use suitable auxiliary means if necessary (carrying strap, lifting gear, etc.).

→ Where appropriate, wear suitable personal protective equipment (e.g., safety shoes, safety gloves).

CAUTION

Risk of injury from sharp edges on the packaging

There is a risk of injury from cutting on the sharp edges when grabbing corners or when opening the packaging.

→ Where appropriate, wear suitable personal protective equipment (e.g., safety shoes, safety gloves).

→ Transport the pump in the original packaging to the installation location.

→ Keep the original packaging of the pump (e.g. for later storage).

→ Inspect the pump for transport damage after receiving it.

→ Document any transport damage that has occurred.

→ Remove any transport safeguards on the pump prior to commissioning.

Parameter

Parameter	Value
Storage temperature [°C]	+ 5 to + 40
Transport temperature [°C]	- 10 to + 60
Permissible humidity (non-condensing) [%]	30 to 85

Tab.11: Transport parameters and storage parameters

NOTICE

Damage to the pump

Commissioning at an insufficient temperature can lead to malfunctions or damage to the pump.

→ Prior to commissioning, make sure that the pump has reached the ambient temperature (*3 Technical data [⟩ 13]*).

6 Installation and connection

Only install the pumps in accordance with the operating parameters and conditions described in Chapter *3 Technical data [} 13]*.

→ Observe the safety instructions (see Chapter *2 Safety [} 6]*).

DANGER

Risk of dangerous gas mixtures during pump operation

Depending on the medium being transferred, breakage of the media-contacting components can result in a dangerous mixture if the medium mixes with the air in the compressor housing or the surroundings.

→ Before using a medium, check the compatibility of the media-contacting components (see *3 Technical data [} 13]*) with the medium.

6.1 Installing the pump

→ Store the pump at the installation location to allow it to adapt to the ambient temperature before installation (condensation must not be allowed to form).

Mounting dimensions

→ For mounting dimensions, see the following figures:

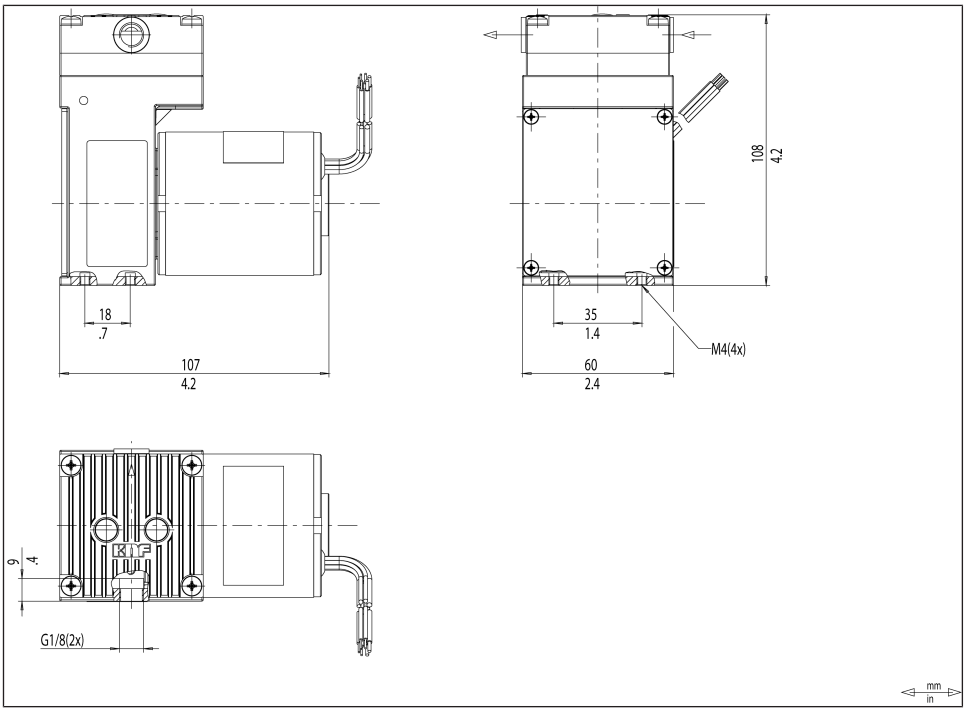

Fig.3: Mounting dimensions N816_DC-B-M

Cooling air supply

WARNING

Danger of burning on hot surfaces

Hot surfaces could occur if the pump overheats.

→ When installing the pump, make sure that sufficient cooling air infeed and discharge is ensured.

Proximity to hot pump parts

→ During installation, make sure that no combustible or thermally deformable objects are positioned in proximity to hot pump parts (head, motor).

Installation location

→ Make sure that the installation location is dry and that the pump is protected from rain, spray water, splash water, dripping water and other contamination.

→ Make sure the installation location allows access for servicing.

i The IP protection class of the pump motor is specified on the type plate.

→ Install the pump at the highest point in the system to prevent condensate from collecting in the pump head.

→ Protect the pump from dust.

→ Protect the pump from coating with greases and oils.

→ Protect the pump from vibration and impact.

Installation position

→ The pump can be operated in any installation position. Use metal screws to fasten the pump at the indicated attachment points. Observe the specifications of the selected fasteners.

NOTICE

Damage to the pump due to condensate

The pump can be damaged by condensate.

→ KNF recommends to mount the pump in an inclined position (sloping down from suction side to pressure side; see the marking on the pump heads).

WARNING

Personal injury and/or property damage from vibrations

Pump vibrations, in combination with adjacent components, can result in crushing and/or damage to these components.

→ Make sure that pump vibrations cannot lead to dangers in combination with adjacent components.

WARNING

Risk of injury during operation

Touching electrical, hot or moving parts of the pump during installation can cause injuries.

→ Take protective measures against touching the electrically live parts (electrical connection, motor windings if applicable).

→ Take protective measures to safeguard against touching moving and hot parts.

→ Automatic restart after tripping of the self-resetting protection temperature limiter.

CAUTION

Risk of pump damage during operation

During installation and/or subsequent operation of the pump, foreign bodies may enter and damage the pump.

→ Take protective measures against allowing foreign objects to enter the pump.

6.2 Electrical connection

DANGER

Risk of death due to electric shock

Improper electrical connection of the pump can result in electric shocks, which can lead to serious injury or even death.

→ Only have the pump connected by specialized personnel.

→ Only have the pump connected if the power supply is disconnected.

→ For electrical connection to a power source, observe the applicable standards, regulations, directives, and technical standards.

→ The pumps have been developed, manufactured and tested for S1 operation.
Additional operating modes can be made possible on a project-specific basis following consultation with KNF Customer Service.

→ Install a device for separating the pump motor from the electrical grid in the electrical installation (e.g. in accordance with EN 60335-1).

→ Protect the pump motors, e.g., in accordance with EN 60204-1 (overcurrent protection, overload protection).

→ KNF recommends operating the motors with a SELV or PELV power supply.
Depending on the customer's device, we recommend connecting the housing to ground.

i Refer to the type plate for the maximum current consumption of the pump.

→ Install an Emergency Off device such that it is not possible for there to be an automatic restart or for hazardous situations to persons and property to occur.

→ Install the pumps in such a way that it is not possible to touch electrically live parts (electrical connection).

Fastening the connection cables

→ Fasten the connection cables so that

- → the cables do not come into contact with movable or hot parts.
- → the cables cannot be worn or damaged on sharp corners or edges.
- → no tensile and pressure forces are exerted on the connection point of the cables (strain relief).

Connecting the pump

1. Confirm that the power supply meets the parameters listed on the pump type plate. Refer to the pump type plate for the rated current draw.

i The supply voltage may deviate by maximum +10% or –10% from the values on the type plate.

NOTICE

Take the direction of rotation into account according to *Electrical connection [} 25]*.

---

2. Electrically connect the pump.

NOTICE

Ensure the correct polarity. With brushless DC motors (indicated by a B at the end of the type designation), incorrect polarity will result in damage to the electronics.

---

3. Connect the positive and negative terminals.

Ensure the correct polarity:
Red connection cable: +
Black connection cable: -

NOTICE

Control voltage may only be applied if the drive controller is supplied with an operating voltage. The drive controller may otherwise be damaged.

Connection diagram for motor controller

Motor			
Term	**Cable color**	**Function**	**Description**
Supply voltage	Red	24V±10%	DC
GND potential	Black	0V	
Cycle speed setpoint	Blue	20 ± 5 kHz	TTL signal
Tachometer signal	Green	3 pulses/revolution	50% PWM TTL signal Max. 2mA
Motor ON/OFF	White	HIGH signal = motor ON LOW signal = motor OFF	TTL signal
Direction of rotation setting	Yellow	HIGH signal = CCW LOW signal= CW	TTL signal
Permissible PWM signal range*			
Cycle speed setpoint according to pump type (**Max. speed at 0% PWM**)			80…0%

Tab.12: Connection diagram for drive controller N816_DC-B-M
**See Chapter 7.3 Control functions DC-B-M [▯ 34]*

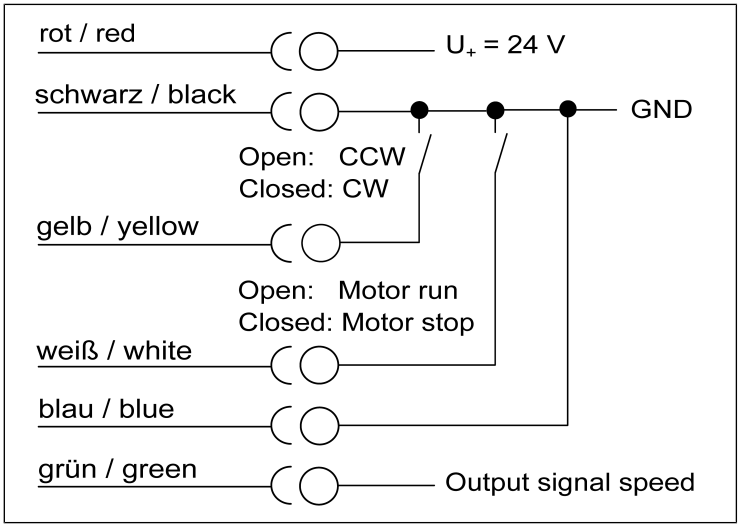

Fig.4: Connection diagram without external setpoint setting

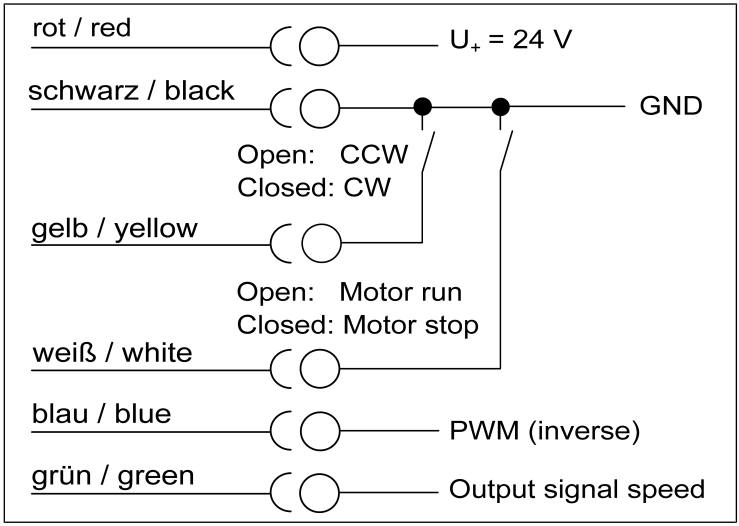

Fig.5: Connection diagram with external setpoint setting

6.3 Pneumatic connection

CAUTION

Personal injury or property damage through ejected plugs

If not removed, the plugs on the outlet of the pump can be ejected during operation by the resulting overpressure.

→ Remove the plugs during installation.

→ Wear appropriate personal protective equipment.

Connected components

→ Only connect components to the pump that are designed for the pneumatic data and thermal requirements of the pump. (see Chapter *3 Technical data [} 13]*).

Pump discharge

→ Discharge the possibly hot pump discharge at the pneumatic outlet of the pump safely (with regard to medium and noise).

Decoupling

→ KNF recommends mechanically decoupling the pump from the pipe system, e.g., through the use of flexible hoses or pipes. In this way it is possible to prevent the transfer of possible pump vibrations and noises to the system.

Connecting the pump

i A marking on the pump head indicates the flow direction.

CAUTION

Risk of injury due to mixing up inlet and outlet

Mixing up the inlet and outlet may cause breakage of components connected at the inlet and outlet.

→ Observe the marking of inlet and outlet on the pump head.

1. Remove the protective plugs from the connections.
2. Connect the suction line and the pressure line (for mounting dimensions, see Chapter *3 Technical data [⟩ 13]*).
3. Lay the suction line and pressure line with a descent so that no condensate can run into the pump.

7 Operation

7.1 General

WARNING

Risk of burns from hot pump parts and/ or hot medium

Some pump parts may be hot during or after operation of the pump.

→ Allow the pump to cool after operation.

→ Take protective measures to protect against touching hot parts.

WARNING

Injury to eyes

Coming too close to the inlet/outlet of the pump may result in injury to the eyes due to the present vacuum/operating pressure.

→ Do not look into the pump inlet/ outlet during operation.

→ Only operate the pumps under the operating parameters and operating conditions as described in Chapter *3 Technical data [} 13]*.

→ Ensure the proper use of the pumps (See Chapter *2.6.1 Proper use [} 9]*).

→ Rule out the possibility of foreseeable misuse of the pumps (see chapter *2.6.2 Foreseeable misuse [} 10]*).

→ Observe the safety instructions (Chapter *2 Safety [} 6]*).

→ The pumps are built-in devices. Before they are commissioned, it must be ensured that the machines or systems into which the pumps are installed comply with the relevant provisions.

WARNING

Risk of bursting of pump head due to excessive pressure increase

Excessive pressure increase during pump operation can cause the head to burst, resulting in material damage or personal injury.

→ Do not exceed the maximum permissible operating pressure (see *3 Technical data [} 13]*).

→ Monitor the pressure during operation.

→ If the pressure exceeds the maximum permissible operating pressure of the pump: immediately switch off the pump and remedy the fault (see Chapter *10 Troubleshooting [} 46]*).

→ Only throttle or regulate the air or gas quantity on the inlet line to prevent the maximum permissible operating pressure from being exceeded.

→ If the air quantity or gas quantity on the outlet line is throttled or regulated, make sure that the maximum permissible operating pressure at the pump is not exceeded.

→ Ensure that the pump outlet is not closed or restricted.

NOTICE

Material damage due to excess pressure

Exceeding the maximum permissible operating overpressure can result in material damage to the pump.

→ Excessive pressure, with all of the associated hazards, can be prevented by means of a bypass line with a pressure relief valve between the outlet and inlet of the pump. Further information is available from KNF Customer Service (contact data: see *www.knf.com*).

WARNING

Risk of dangerous gas mixtures during pump operation if diaphragm breaks

If the diaphragm should break, the medium will mix with the air in the compressor housing or in the surroundings.

→ Stop pump immediately.

→ Replace the diaphragm prior to further operation (see Chapter *8 Servicing [} 36]*).

NOTICE

Material damage due to intake of contaminants and objects

Operation with open gas connection at the inlet can result in contaminants and objects being drawn in.

→ If necessary, take protective measures against the ingress of contaminants and objects.

Pump standstill

→ When the pump is at a standstill, establish normal atmospheric pressure in the lines.

Vapors as medium

The service life of the diaphragm can be extended, if no condensate forms in the pump. Therefore:

→ Perform any work with saturated or near-saturated vapors only with a warm pump.

→ KNF recommends: When pumping corrosive media, flush the pump before switching off (see Chapter *8.2.1 Flushing the pump [⧐ 38]*) to extend the service life of the diaphragm.

7.2 Information on switching the pump on and off

Switching on the pump

NOTICE

The pump must not start up against pressure during switch-on. This also applies after a brief power interruption during operation. If a pump starts up against pressure, pump may go into a stall condition.

→ Install an overload protector (see Chapter *6.2 Electrical connection [⧐ 24]*).

→ Ensure that normal atmospheric pressure is present in the lines when switching on.

Switching off/decommissioning the pump

→ At the end of an evacuation or a process, KNF recommends letting the pump run for several minutes with air as the medium to remove condensate from the pump head (drying of the pump).

→ Establish normal atmospheric pressure in the lines (relieve pump pneumatically).

Recommissioning
→ Before recommissioning, observe the applicable standards, guidelines, regulations and technical standards at the electrical connection.

Inspecting the pump
→ Inspect the pump periodically for external damage or leakage.

7.3 Control functions DC-B-M

7.3.1 Speed specification

Speed without external speed setting

The motor operates the pump at a non-variable speed over the entire permissible pressure range.

Speed with external speed setting

The motor operates the pump at a variable speed between n_{min} and $n_{max.}$ The speed is specified by means of the control voltage (U_{Ctrl}).

Specification of the speed is performed via the blue lead (see *Tab. 12 [} 26]*).

7.3.2 Speed output

The speed is output via the green lead (see *Tab. 12 [} 26]*).

The drive controller generates a speed-synchronous square frequency (see Fig. 6).

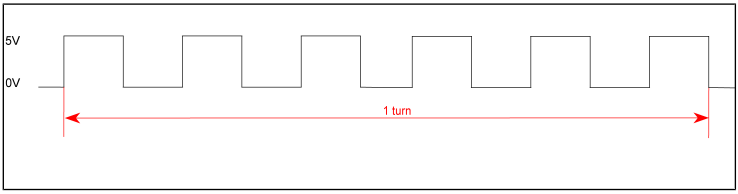

Fig.6: Speed output

7.3.3 Input signal for direction of motor rotation

The input signal for direction of motor rotation is applied via the yellow lead (see *Tab. 12 [} 26]*).

7.3.4 Input signal for remote ON/OFF

The input signal for remote ON/OFF is applied via the white lead (see *Tab. 12 [} 26]*).

8 Servicing

NOTICE

Servicing the pump

Damage to the pumps can result from failure to observe the applicable legal regulations and procedures for the location or intervention by untrained or uninstructed personnel.

→ Servicing may only be performed according to the legal regulations (e.g. work safety, environmental protection) and provisions.

→ Servicing may only be performed by specialized personnel or trained and instructed personnel.

8.1 Servicing schedule

Component	Maintenance interval
Pump	→ Perform periodic inspections for external damage or leakage. → Perform periodic inspections for noticeable changes to noises and vibrations.
Gas connections	→ Perform periodic inspections for external damage or leakage.
Diaphragms and valves	→ Replace if the pressure or flow rate of the pump changes for no apparent reason. → At the latest, replace when the performance decreases.

Tab.13: Servicing schedule

8.2 Cleaning

NOTICE

Material damage due to cleaning work

Failure to observe the cleaning instructions may result in material damage to the device if liquids penetrate the inside of the housing.

→ Ensure that no fluids enter the interior of the housing.

8.2.1 Flushing the pump

When transferring dangerous and environmentally hazardous media, KNF recommends flushing the pump with air at atmospheric pressure for a few minutes prior to switch-off (if necessary for safety reasons: with an inert gas) to extend the service life of the diaphragm.

→ Discharge the media safely.

8.2.2 Cleaning the pump

Requirements

→ Pump disconnected from mains and voltage-free

CAUTION

Risk of burns from hot pump parts

The pump head or motor may still be hot after operation of the pump.

→ Allow the pump to cool after operation.

WARNING

Health hazard due to dangerous substances in the pump

Depending on the medium being transferred, caustic burns or poisoning is possible.

→ Wear protective equipment if necessary, e.g., protective gloves, goggles.

→ Clean the pump with suitable measures.

NOTICE

Material damage due to entry of liquids

When cleaning the pump, liquids may enter the inside of the housing, which can damage the pump.

→ During cleaning work, ensure that no fluids enter the interior of the housing.

→ Only clean the pump with a dry wiping cloth. When cleaning, use no solvents if possible as these can affect the plastic parts.

→ Only use solvents during cleaning if head materials are not corroded (ensure resistance of the material).

→ If compressed air is available, blow out the components.

8.3 Replacing diaphragm and valve plates/ sealing rings

Requirements

→ Disconnect the motor from the power supply network and ensure that it is voltage-free.

→ Clean the pump and remove any hazardous materials from the pump.

→ Remove the hoses from the pneumatic pump inlet and pump outlet.

CAUTION

Risk of burns from hot pump parts

The pump head or motor may still be hot after operation of the pump.

→ Allow the pump to cool after operation.

→ Always change the diaphragm and valve plates/sealing rings together so as to maintain the performance and safety of the pump.

WARNING

Health hazard due to dangerous substances in the pump

Depending on the medium being transferred, caustic burns or poisoning is possible.

→ Wear protective equipment if necessary, e.g., protective gloves, goggles.

→ Clean the pump with suitable measures.

Spare parts

Spare part*	Item designation	Quantity
Diaphragm	(9)	1
Valve plate/seal	(2)	2

*Tab.14: *According to spare parts list, Chapter 9.1 Spare parts [▯ 45]*

Tools and material

Quantity	Tool/material
1	Size 2 Phillips screwdriver
1	Felt-tip pen

*Tab.15: *According to accessories list, Chapter Accessories*

Removing the cover

1. Remove the cover (**11**) from the housing after loosening the four screws (**12**).

Removing the pump head

1 Intermediate plate
2 Valve
3 Head plate
4 Screw
5 Screw cover
6 Screw
7 Disk spring
8 Washer
9 Diaphragm
10 Shim(s)

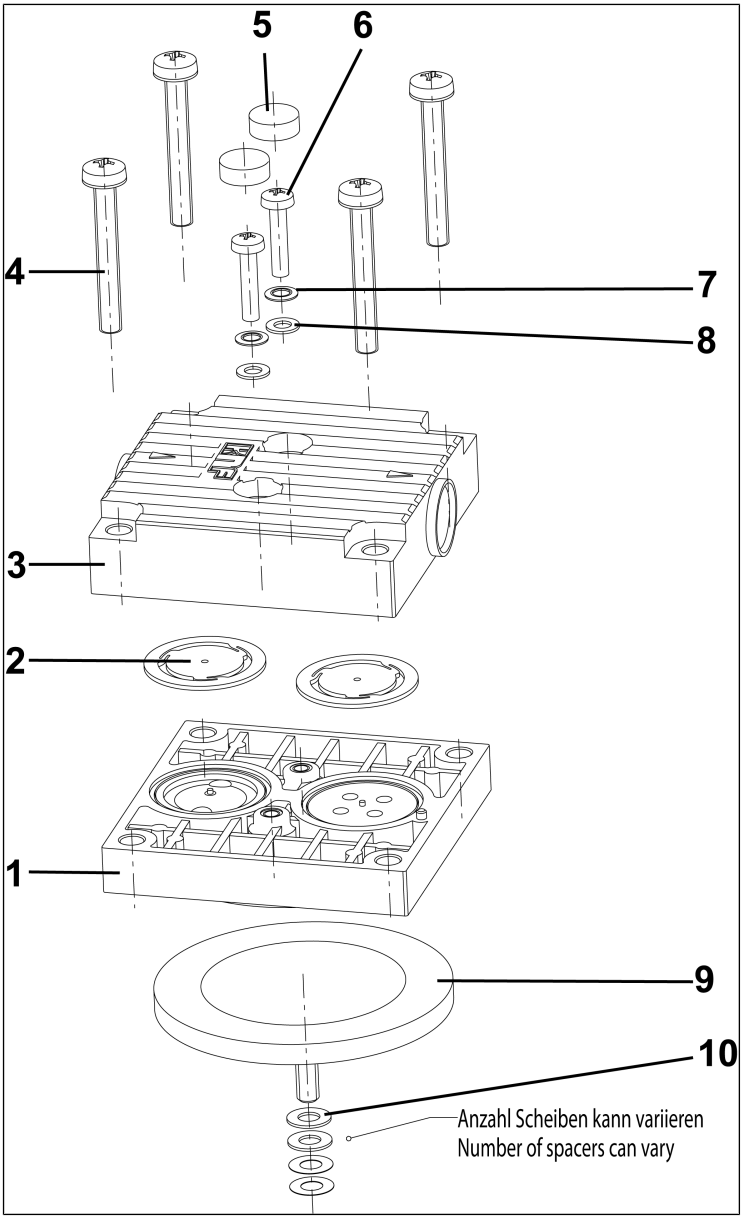

Fig.7: Pump head (exploded view, symbolic)

1. Mark the position of head plate (**3**), intermediate plate (**1**) and pump housing with respect to one another by means of a continuous line made with a felt-tip pen to ensure proper mounting.
2. Loosen the four screws (**4**) and remove them from the head plate (**3**).
3. Remove the head plate (**3**) and the intermediate plate (**1**) together from the pump housing.
4. Carefully set down the head plate to so as not to damage its sealing edge.

Changing the diaphragm

1. Lift the diaphragm (**9**) by the opposite side edges, grasp the diaphragm and unscrew it counterclockwise.
2. Remove the shim(s) (**10**) from the threaded bolt of the diaphragm and keep them in a safe place.
3. Check all parts for contamination and clean them if necessary (see chapter *8.2 9.2.2 [} 38]*).
4. Place the shim(s) (**10**) on the thread of the new diaphragm (**9**) in this order.
5. Move the connection rod (connection part between drive shaft and diaphragm) to the upper reversal point.
6. Screw the diaphragm (**9**) with shim(s) (**10**) clockwise onto the connection rod and finger-tighten.

Changing the valve plate/seal

1. Separate the head plate (**3**) from the intermediate plate (**1**).
2. Remove the valve plates/seals (**2**) from the intermediate plate (**1**).
3. Check the valve seats, intermediate plate (**1**) and head plate (**3**) for contamination and damage. Clean the parts if necessary.
4. Contact KNF in the event of unevenness, scratches or corrosion. Order and replace damaged parts.

5. Insert the valve plate/seal:

i The valve plates/seals are identical for the pressure side and suction side; the same applies for the top and bottom of the valve plates/seals.

6. Insert the new valve plates/seals (**2**) in the valve seat of the intermediate plate (**1**).
7. By moving the valve plates/seals (**2**) sideways slightly, make sure that the hole of the valve plates/seals (**2**) is centered on the centering pin of the intermediate plate (**1**).
8. Place the head plate (**3**) on the intermediate plate (**1**) according to the felt-tip pen marking.
9. With a slight lateral movement of the head plate (**3**), check its centering.
10. Connect the head plate (**3**) and the intermediate plate (**1**) by tightening the two screws (**6**) finger-tight.

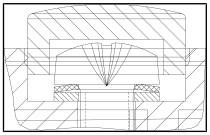

Fig.8: Alignment of disk springs

i For the arrangement of the spring washers (**7**) and washer (**8**) as well as the alignment of the spring washers, see Fig. 8.

11. Mount the screw covers (**5**).
12. Properly dispose of the replaced diaphragm, valve plates/seals.

Mounting the pump head

1. Place the pump head on the housing according to the felt-tip pen marking.
2. Screw in the screws (**4**) and tighten them lightly crosswise.
3. Check for ease of movement of the pump by turning the counterweight.
4. Tighten the screws (**4**) finger-tight in a crosswise pattern.
5. Reattach the cover (**11**) to the housing.

Final steps

1. Reconnect the suction line and the pressure line to the pump.
2. Connect the pump to electrical power supply.

If you have questions with regard to maintenance, please contact your KNF technical adviser (contact data: see www.knf.de).

9 Spare parts and accessories

i To order spare parts and accessories, please contact your KNF sales partner or KNF Customer Service (contact data: see www.knf.com).

9.1 Spare parts

Spare part set

A spare part set consists of:

Parts	Item number*	Quantity
Valves	(**2**)	2
Diaphragm	(**9**)	1

*Tab.16: *See Chapter 8.3 Replacing diaphragm and valve plates/ sealing rings [⟩ 39]*

Spare part set	Order number
N816KT_	342835
N816KN_	342875

Tab.17: Spare part set

10 Troubleshooting

DANGER

Risk of death due to electric shock

Working on the pump connected to the power supply can result in electric shocks, which can lead to serious injury or even death.

→ All work on the pump may only be performed by authorized specialized personnel.

→ Before working on the pump: Disconnect the pump from the power supply.

→ Check and ensure that no voltage is present.

→ Allow the pump to cool before troubleshooting.

→ Check the pump (see following tables).

Pump not delivering	
Cause	**Troubleshooting**
Pump is not connected to the electrical power supply.	→ Connect the pump to electrical power supply.
No voltage in the electrical power supply.	→ Check the circuit breaker for the room and switch it on if necessary.
Pneumatic connections or lines are blocked.	→ Check the connections and lines. → Remove the blockage.
External valve is closed or filter clogged.	→ Check external valves and filters.
Condensate has collected in the pump head.	→ Separate the source of the condensate from the pump. → Flush the pump with air at atmospheric pressure for a few minutes (if necessary for safety reasons: with an inert gas). → Install the pump at the highest location in the system.
Max. voltage range of motor exceeded.	→ Disconnect pump from electrical mains. → The applied voltage must not exceed the value specified in Chapter *6.2 Electrical connection [⮫ 24]*.
Incorrect polarity of the connection leads	→ Disconnect pump from electrical mains. → Ensure correct polarity of the connection leads and connect the pump.
Diaphragm and valves are worn or defective.	→ Replace diaphragm and valves (see Chapter *8 Servicing [⮫ 36]*).

Tab.18: Troubleshooting: Pump not delivering

Flow rate, pressure or vacuum too low **The pump does not reach the performance stated in the technical data or data sheet.**	
Cause	**Troubleshooting**
Condensate has collected in the pump head.	→ Separate the source of the condensate from the pump. → Flush the pump with air at atmospheric pressure for a few minutes (if necessary for safety reasons: with an inert gas). → Install the pump at the highest location in the system.
There is overpressure on the pressure side and at the same time vacuum or pressure above atmospheric pressure on the suction side.	→ Change the pneumatic conditions.
Pneumatic lines or connection parts have insufficient cross-sections or are constricted.	→ Disconnect the pump from the system to determine the output values. → Eliminate any constriction (e.g. valve). → Use lines or connection parts with a larger cross-section if necessary.
Leaks occur at pneumatic connections, lines or pump head.	→ Eliminate the leaks.
Pneumatic connections or lines are partially or completely blocked.	→ Check the pneumatic connections and lines. → Remove any parts or particles that are causing blockages.
Head parts are soiled.	→ Clean the head components.
Working diaphragm broken	→ Stop the pump immediately. → Change the diaphragm (see *8 Servicing [} 36]*).
Diaphragm and valves are worn or defective.	→ Replace diaphragm and valves (see Chapter *8 Servicing [} 36]*).

Tab.19: Troubleshooting: Flow rate, pressure or vacuum too low

Pump exhibiting changed running noises and vibrations	
Cause	**Troubleshooting**
Pump bearing worn or defective.	→ Determine the cause. → Contact KNF Customer Service.

Tab.20: Troubleshooting: Pump exhibiting changed running noises and vibrations

Fault cannot be rectified

If you are unable to identify any of the specified causes, send the pump to KNF Customer Service (contact data: see *www.knf.com*).

1. Flush the pump with air for a few minutes (if necessary for safety reasons: with inert gas) at atmospheric pressure to free the pump head of dangerous or aggressive gases (see Chapter *8.2.1 Flushing the pump [} 38]*).
2. Clean the pump (see Chapter *8.2.2 Cleaning the pump [} 38]*).
3. Send the pump together with completed Health and Safety Clearance and Decontamination Form to KNF, specifying the pumped medium.

11 Returns

Preparing for return

1. Flush the pump with air for a few minutes (if necessary for safety reasons: with inert gas) at atmospheric pressure to free the pump head of dangerous or aggressive gases (see Chapter *8.2.1 Flushing the pump [} 38]*).

i Please contact your KNF sales partner if the pump cannot be flushed due to damage.

2. Remove the pump.
3. Clean the pump (see Chapter *8.2.2 Cleaning the pump [} 38]*).
4. Send the pump together with the completed Health and Safety Clearance and Decontamination Form to KNF, stating the nature of the transferred medium.
5. Pack the device securely to prevent further damage to the product. If necessary, request original packaging for a fee.

Returns

KNF shall undertake to repair the pump only under the condition that the customer presents a certificate regarding the medium that is pumped and the cleaning of the pump. In this case too, old devices can be returned. Please follow the instructions at knf.com/repairs here.

Contact your KNF sales partner directly if you require additional support for your return service.

12 Appendix: China RoHS

For further information, see also

- KNF Statement on China RoHS.pdf

SJ-T 11364-2024 Hazardous Substance Disclosure Table / SJ-T 11364-2024 有害物质含量表

This declaration is valid for the KNF products produced by:

本声明适用于由以下KNF公司生产的产品:

KNF Neuberger GmbH DE-79112 Freiburg Germany

The following information has been made available to comply with SJ-T 11364-2024 the Marking for Control of Pollution Caused by Electronic Information Products as required by China's Management Methods for the Control of Pollution from Electronic and Electrical Products.

提供以下信息旨在遵守中国《电子信息产品污染控制管理办法》所要求的 SJ-T 11364-2024《电子信息产品污染控制标识》标准。

Part Name 部件名称	Hazardous Substances Table 有害物质含量表						EFUP / 环境友好使用期限 	China RoHS comment / 中国RoHS注释	EU RoHS compliant / 符合欧盟RoHS指令
	Lead 铅 (Pb)	Mercury 汞 (Hg)	Cadmium 镉 (Cd)	Hexavalent Chromium 六价铬 (Cr(VI))	Polybrominated biphenyls 多溴联苯 (PBB)	Polybrominated diphenyl ethers 多溴二苯醚 (PBDE)			
Pump head / 泵头	X	O	O	O	O	O	20	Lead within EU RoHS exemption limit / 铅含量在欧盟RoHS豁免限值以内	Yes / 是
Pump housing / 泵体	X	O	O	O	O	O	20	Lead within EU RoHS exemption limit / 铅含量在欧盟RoHS豁免限值以内	Yes / 是
Pump motor / 泵的电机	X	O	O	O	O	O	20	Lead within EU RoHS exemption limit / 铅含量在欧盟RoHS豁免限值以内	Yes / 是
Additional components for systems / 系统附加部件	X	O	O	O	O	O	20	Lead within EU RoHS exemption limit / 铅含量在欧盟RoHS豁免限值以内	Yes / 是

O: Indicates that this toxic or hazardous substance contained in all of the homogeneous materials for this part is below the limit requirement in SJ-T 11364-2024. 表示该有害物质在该部件所有均质材料中的含量均在 SJ-T 11364-2024 规定的限量要求以下。

X: Indicates that this toxic or hazardous substance contained in at least one of the homogeneous materials used for this part is above the limit requirement in SJ-T 11364-2024. 表示该有害物质至少在该部件的某一均质材料中的含量超出 SJ-T 11364-2024 规定的限量要求。

EFUP /环境友好使用期限: Environment Friendly Using Period / 环境友好使用期

KNF Neuberger GmbH
Alter Weg 3
79112 Freiburg
Germany
Tel. +49 (0)7664/5909-0

E-mail:
info.freiburg@knf.com
www.knf.com

KNF worldwide

You can find our local KNF partners at: www.knf.com